(for Textbooks 625 + 666)

666- SN 26647

610 adap SN 7729

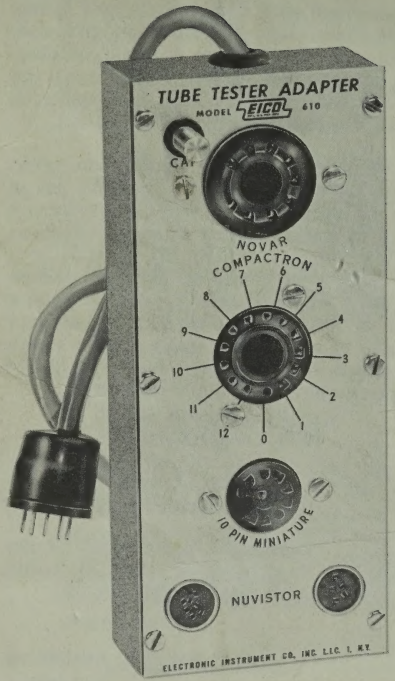

model 610 TUBE TESTER ADAPTER

610-1

EICO 610 instruction manual....

GENERAL DESCRIPTION

The EICO Model 610 Tube Tester Adaptor adapts either the EICO Model 625 or 666 Tube Testers for testing the following tube types:

5 PIN NUVISTOR
7 PIN NUVISTOR
NOVAR
12 PIN COMPACTRON
10 PIN MINIATURE

The adaptor consists of inter-wired sockets for all of the above tube types in a compact metal case, plus a 9-wire cable terminated in a 9-pin miniature plug that is inserted in the socket on the tube tester; a tenth connection is provided by a cap terminal on the adaptor to which is connected a grid cap lead of the tube tester. The normally blank key space on the compactron socket in the adaptor is drilled to permit a compactron to be inserted in the socket with the key at any desired position, so as to permit all sections of the compactron to be tested without switching.

Two supplementary tube charts are provided covering tubes of the above-listed types, one for the Model 625 Tube Tester, and the other for the Model 666 Tube Tester. While it is true that the Model 610 may be used with tube testers of other manufacture, we cannot supply settings for other tube testers so please do not request it.

If desired, the Model 610 may be mounted on either the Model 625 or Model 666 Tube Testers. See Figs. 1 and 2 for the correct mounting positions with each tube tester.

Two holes are provided on the right side of the 610 cabinet for mounting on the 666 Tube Tester, and another two holes on the left side for mounting on the 625 Tube Tester. Corresponding holes will have to be drilled in the tube tester cabinets. To do this, remove the cabinets from both the 610 and the tube tester and position the 610 cabinet as shown against the tube tester cabinet to mark the positions of the holes to be drilled in the tube tester cabinet. Using a No. 5/32-inch drill will provide holes in the tube tester cabinet of the proper size. Use the following hardware to bolt the 610 and tube tester cabinets together: two No. 6-32 x 5/16" screws, two No. 6-32 hex nuts, and two No. 6 lockwashers.

OPERATING INSTRUCTIONS

1. Plug the 9 pin adaptor plug in the 9-pin miniature socket of the tube tester.

2. If the tube to be tested is either a 10-pin miniature or a compactron, connect the grid cap lead of the 666, or the No. 10 grid cap lead of the 625, to the cap terminal on the 610.

3. If a compactron is being tested, locate the blank space or key on the base of the tube and mark its location on the side of the tube with a grease pencil. For testing the various sections of the compactron, the tube will have to be inserted in the socket with the blank space or key at various positions.

4. Consult the supplementary chart for your tester (625 or 666) and locate the settings for the tube you are

COPYRIGHT© 1962 EICO ELECTRONIC INSTRUMENT COMPANY, Inc.

testing. Make the settings (or the first line of settings) on your tube tester.

5. Insert the tube in the appropriate socket of the 610. If it is a compactron, insert the tube so that the key space is at the number on the panel given in the setting.

6. Test the tube, or the particular section of the tube, as usual.

7. If the tube is a multi-section tube, make the second line of settings. If it is a compactron, consult the chart to see whether the key space location is different for this test. If it is, remove the compactron from the socket and re-insert it so that the key space is at the number on the panel given in the setting. Now test the particular tube section as usual. The procedure is the same for additional lines of settings.

SERVICE CONSULTATION

If you are experiencing trouble that you cannot diagnose yourself, you are invited to avail yourself of the EICO Service Consultation Department. The consultant handling your inquiry will make every effort to diagnose the cause of your particular difficulty based on the information that you provide. Please be as thorough as possible. Include the following information about your unit:

a) Have you made a thorough check of the wiring, checking also for cold solder joints, or accidental shorting between parts, or to chassis? (Check to see whether a bare wire or lead extends far enough to be shorted when the bottom plate is put on).

b) Have you checked that the proper tube or transistor is in each socket, and also making proper contact in the socket?

c) Does the trouble occur at one time or one operating situation, but not at another time or operating situation? Be as specific as possible in this respect.

d) Have you observed any pecularity about a part? If a part appears charred or otherwise damaged by excessive heat, please say so. If you think you have damaged a particular part in the assembly or wiring, please say so. In conjunction with the symptoms, the consultant may be able to determine whether such a part is likely to be defective.

In addition, list any code numbers in red under the words INSTRUCTION MANUAL on the cover of the book provided with your unit. If there are no red code numbers, state this specifically. If the unit bears a serial number, it is essential that you include this also.

PARTS REPLACEMENT

If it appears that a component is defective, and

you desire a replacement from EICO, address your correspondence to our Customer Service Department.

If you are claiming the right to a no-charge replacement under the terms and conditions of the warranty, it is required that you shall have sent in the registration card within 10 days of the date of purchase, and that you send back the defective part transportation prepaid. EICO will make the necessary replacement at no charge for parts eligible under the terms and conditions of the warranty. In returning tubes, pack them very carefully to avoid breakage in shipment. Broken tubes will not be replaced. Please read the warranty on the subject of parts eligible for replacement.

Further information required on a part returned to the factory for a no-charge replacement under the terms and conditions of the warranty is as follows:

a) Model number and serial number, if any, of unit. Also any code numbers in red under the words INSTRUCTION MANUAL on the cover of the book supplied with the unit.

b) Stock number and description of part as given on the parts list. If the part is not listed (of itself) in the parts list, it means that the part is integral with a sub-assembly. If the sub-assembly is not sealed, and the defective part is definitely identified and easily replaceable (not more than two connections), you may request replacement for the particular part. If the sub-assembly is sealed, or if the defective part is not definitely identified or is not easily replaceable (more than two connections), then remove the sub-assembly and return it to EICO (less any tubes) for repair or replacement, if your unit is in warrantee. If your unit is out of warrantee, you are generally advised to order a replacement sub-assembly.

c) Describe as completely as possible the nature of the defect, or your reason for requiring replacement.

FACTORY REPAIR SERVICE

EICO maintains a Factory Repair Service Department for in-warranty or out-of-warranty repair of EICO equipment. It is intended to serve those customers who are not adequately familiar with electronics to make use of the EICO Service Consultation facilities, or whose difficulties cannot be solved by correspondence.

For all out-of-warranty units, there is a minimum labor and handling fee. For the Model No. 610, this fee is $2.50. Charges for components replaced are additional to the minimum fee.

For in-warranty completed kit units, there is a minimum labor and handling fee. For the Model No. 610, this fee is $2.50. There is no charge for a replaced defective part provided that the terms and conditions of the warranty for no charge replacement are not violated in the judgement of EICO.

For in-warranty factory-wired units, there is no labor and handling fee <u>if</u> the unit complies with the

terms and conditions of the warranty in the judgement of EICO. However, if the terms and conditions of the warranty are violated, then there will be charged to customer a minimum labor and handling fee plus the cost of parts replaced.

In all cases, the unit must be sent to the factory transportation prepaid, and the unit will be returned to the customer transportation collect.

The services rendered for the minimum labor and handling fee are the correction of any minor wiring errors (not extensive corrections or re-wiring), the labor involved in replacing defective parts, and any adjustments, alignment, or calibration procedures that would normally be performed on a factory-wired unit. Units not wired according to instructions, or modified in any way, or showing evidence of the use of acid core solder, will not be serviced and will be returned to the customer forthwith.

Units requiring extensive corrections or re-wiring will incur an additional labor charge which will be set by EICO. The customer will be informed of this situation and written authorization from the customer will be required before the work is done.

Please note: minimum labor and handling fees are subject to revision at any time.

LOCAL REPAIR FACILITIES

Out-of-warranty repair work may also be performed by authorized service stations as well as the EICO factory. A list of authorized service stations is provided with this manual. The roster of stations may change from time to time, and if considerable time has elapsed since you purchased your unit, you are advised to contact the station you choose before sending the unit to them for repair. Use of a local service station will often result in faster service, and, usually, lower transportation costs.

It is necessary that you comply with the Shipping Instructions that follow when sending in a unit for service.

SHIPPING INSTRUCTIONS

You are strongly advised to retain the original shipping carton and inserts in the case that re-shipment is required for service or any other purpose. The carton may be collapsed, for storage in as small a space as possible. In very many cases, the same carton is used for kit and factory-wired units so that the kit carton will serve for re-shipment of the completed kit.

To submit a unit for service, either to the factory or an authorized service station*, fill out completely the Service Work Order from provided with the manual. Pack the unit very carefully, preferably in the original shipping carton with the original inserts.

If this is not possible, use a strong oversize carton, preferably wood, allowing at least 3 inches of resilient packing material such as shredded paper or excelsior, to be inserted between all sides of the unit and the carton. Seal the carton with strong gummed paper tape or strong twine, or both. Include the Service Work Order in the carton and in addition, attach a tag to the instrument on which is printed your name and address and brief reference to the trouble experienced. Affix "FRAGILE" or "HANDLE WITH CARE" labels to at least four sides of the carton, or print these words large and clear with a bright color crayon. Ship by prepaid Railway Express or parcel post to:

EICO Electronic Instrument Co., Inc.
33-00 Northern Blvd.
Long Island City 1, New York
Attention: Service Department

Include your name and address on the outside of the carton. Return shipment will be made transportation charges collect. Note that a carrier cannot be held liable for damages in transit, if packing, IN HIS OPINION, is insufficient.

*Authorized service stations are for out-of-warranty units only, unless the station is specifically noted on the List of Authorized Service Stations to be authorized for other work.

EICO THE EICO WARRANTY EICO

The Electronic Instrument Company, Inc., hereafter referred to as EICO, warrants that, for a period of 90 days from the date of purchase, any EICO kit will be free of defects in parts, and that any EICO factory-wired unit will be free of defects in parts and workmanship. For an EICO kit, EICO's obligation is limited to those parts which are returned transportation prepaid to the factory without further damage, and in the judgement of EICO are either originally defective or have become defective in normal use. For an EICO factory-wired unit, EICO's obligation is limited to those parts, sections, or the entire unit which is returned transportation prepaid to the factory without further damage, and in the judgement of EICO are either originally defective or have become defective in normal use.

The warranty does not apply to any parts damaged in the course of handling, assembling, or wiring by the customer, or damaged due to abnormal usage or in violation of instructions or reasonable practice, or further damaged to a consequential degree in return shipment. Furthermore, the foregoing warranty is made only to the original customer, and is and shall be in lieu of all other warranties, whether expressed or implied, and of all other obligations or liabilities on the part of EICO, and in no event shall EICO be liable for any anticipated profits, consequential damages, loss of time, or other losses incurred by the customer in connection with the purchase or operation of EICO products or components thereof.

The registration card, which accompanies each EICO kit or factory-wired unit, must be filled in and returned to the company within 10 days after the date of purchase. This warranty applies only to registered units.

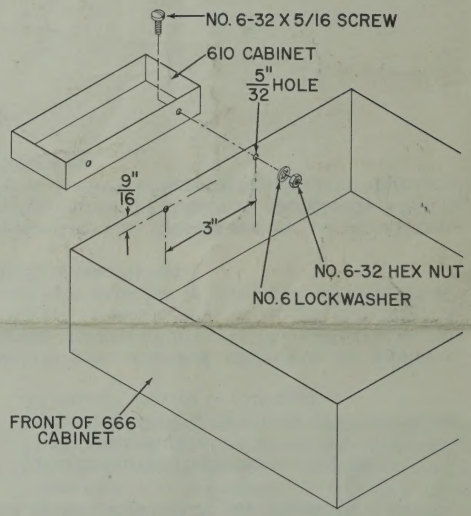

Figure 1. 610 Cabinet Mounting for 666

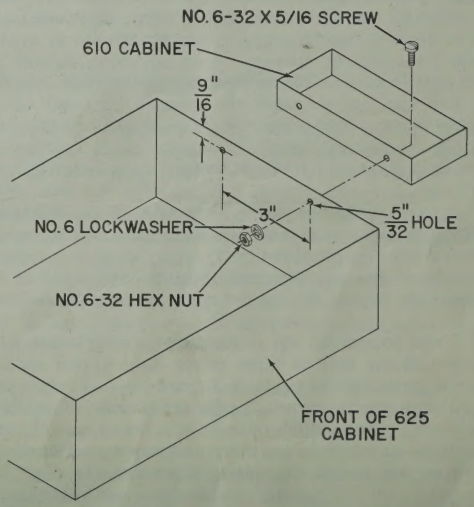

Figure 2. 610 Cabinet Mounting for 625

610 PARTS LIST

SYM.#	STOCK#	AM'T.	DESCRIPTION
P1	51013	1	plug, 9 pin miniature
XV4	97072	1	socket, 5 pin NUVISTOR
XV5	97073	1	socket, 7 pin NUVISTOR
XV1	97068	1	socket, 10 pin miniature
XV2	97067	1	socket, 12 pin COMPACTRON
XV3	97066	1	socket, 9 pin NOVAR
	40007	6	nut, hex, No. 4-40
	41014	1	screw, No. 6-32 x 3/8
	41023	6	screw, No. 4-40, self tapping
	41090	6	screw, No. 4-40 x 5/16
	42003	1	washer, No. 6, fibre, flat
	42006	1	washer, No. 6, fibre, shoulder
	42007	6	washer, No. 4, lock
	43000	1	lug, No. 6 solder
	45014	1	cap, grid
	46000	1	grommet, 3/8" rubber
	58442	length	cable, 9 conductor insul.
	80131	1	panel
	88110	1	cabinet
	89577	1	strain relief
	89691	1	cover, rubber for PI
	66110	1	manual of instructions (wired)
	66365	1	manual of construction (kit)

Cabinet Mounting Hardware	40000	2	nut, hex, No. 6-32
	41086	2	screw, No. 6-32 x 5/16
	42002	2	washer, No. 6, lock

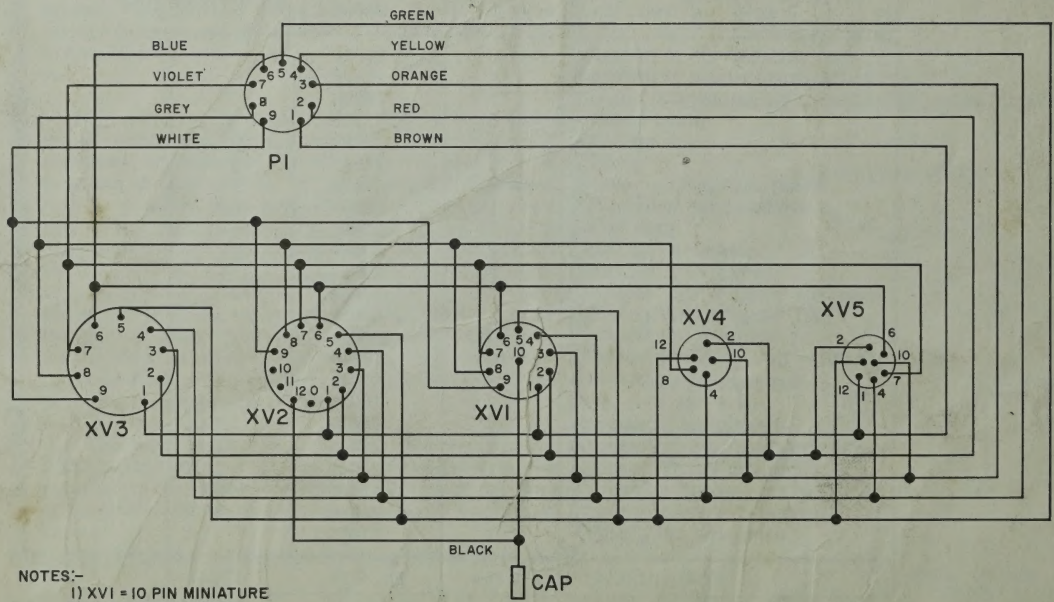

NOTES:-
1) XV1 = 10 PIN MINIATURE
2) XV2 = COMPACTRON
3) XV3 = NOVAR
4) XV4 = 5 PIN NUVISTOR
5) XV5 = 7 PIN NUVISTOR
6) P1 = 9 PIN PLUG

Figure 3. Schematic Diagram for 610